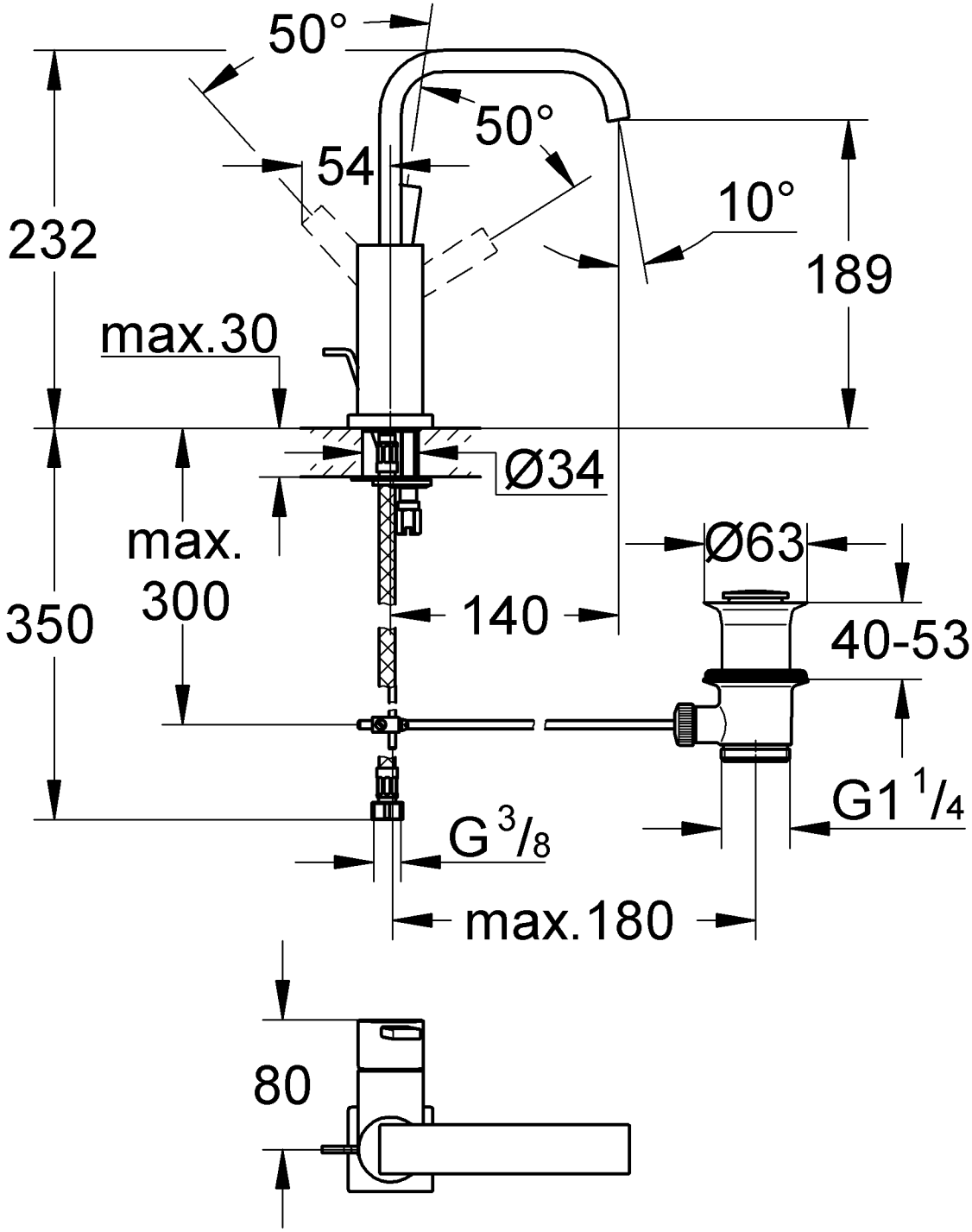
50°
50°
54
10°
232
189
max.30
Ø34
max.
300
350
140
Ø63
40-53
G1 1/4
G 3/8
max.180
80